Manganese Dioxide Lithium Battery

CR1220(36mAh)

maxell

Diagrams of Batteries with Terminals

Vertical & Through hole Type

● **External Dimensions (unit: mm)**

CR1220

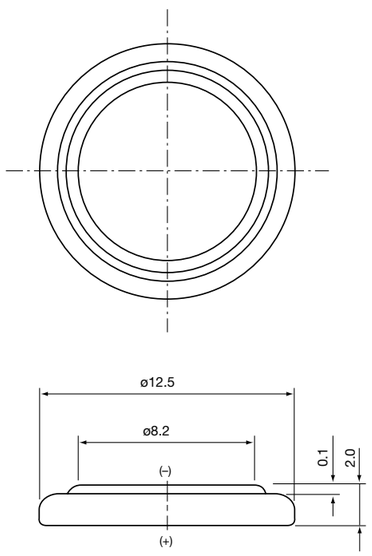

CR1220T4

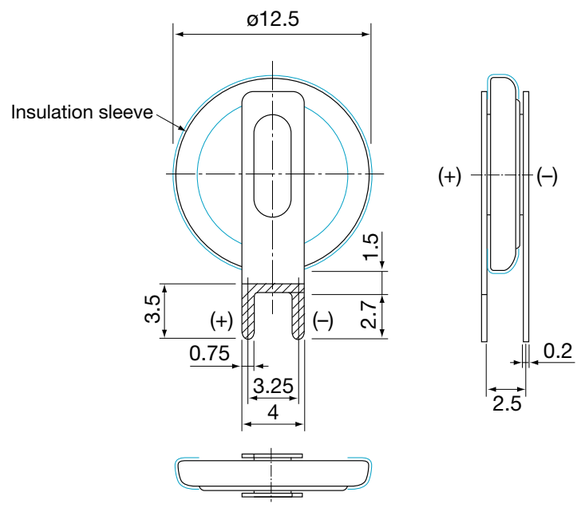

Tin plating