Lithium Thionyl Chloride Battery

ER3 (1100mAh)

maxell

Diagrams of Batteries with Terminals

● External Dimensions (unit: mm)

Horizontal & Through hole Type

ER3 #2 PC

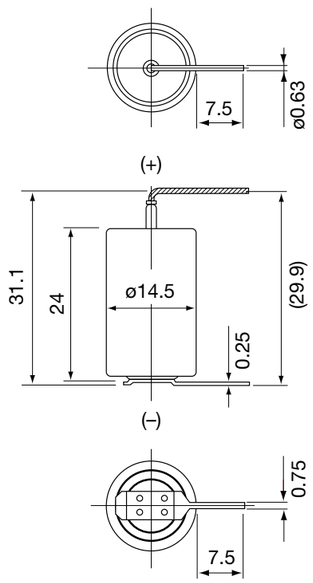

Wire connector Type

ER3 WKP

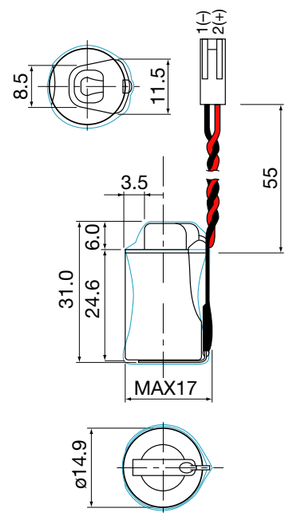

Housing: IL-2S-S3L-(N) (JAE)
Contact: IL-C2-1-1000 (JAE)
Lead wire: AWG24

: Tin plating